ULTI FUNCTIONAL GPS TRACKER

User Manual

MODEL:TK417

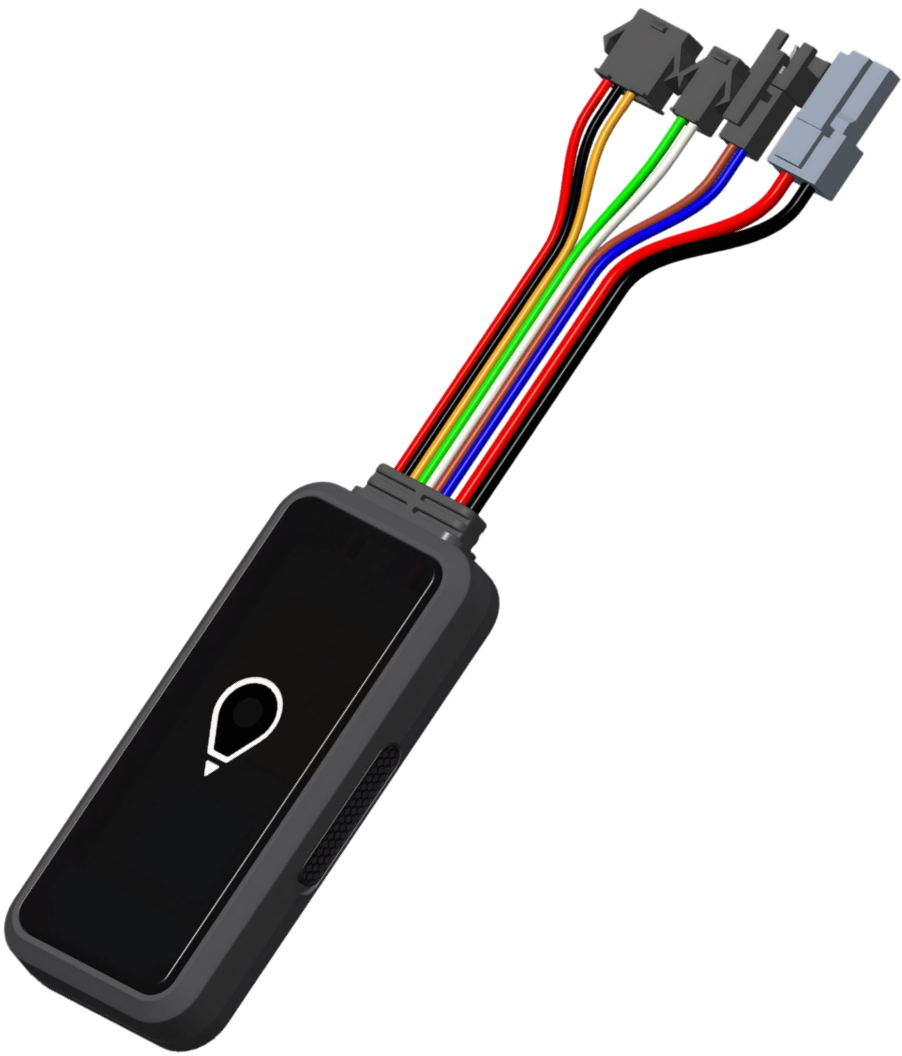

<GPS、BDS、GLONASS、WiFi、LBS seamless indoor and outdoor positioning>

Professional Tracking System

Ⅰ. Product Features.....5
Ⅱ. Components and Accessories..... 7
Ⅲ. SIM card Installation.....9
Ⅳ. Device Installation..... 10
4.1 Install Device·····10
4.2 Device Wiring Definition·····12
4.3 Function Module·····13
Ⅴ. Power On / Off.....15
5.1 Power On.....15
5.2 LED Indicators.....16
5.3 Power Off.....16
Ⅵ. Inquiry/Monitoring/Cut Oil..... 17
6.1 Inquiry by Service Platform.....17
6.2 Inquiry by SMS.....17
6.3 Cut Oil /Restore.....17
Ⅶ. Device Alarm..... 18
7.1 SOS Alarm·····18
7.2 Vibration Alarm·····18
7.3 Shock Alarm·····19
7.4 Speed Alarm·····19

7.5 Shift Alarm·····19
7.6 Geo-fence Alarm·····19
7.7 Power Disconnect Alarm·····20
7.8 Low Battery Alarm·····20
7.9 Temperature&humidity Alarm·····20
Ⅷ. Device Setting.....20
Ⅸ. Trouble shooting.....21
9.1 Cannot connect platform·····21
9.2 Offline Status·····21
9.3 No Positioned·····22
9.4 Position Drift·····22
9.5 Commands Receiving abnormally·····23
Ⅹ. Warranty Rules.....23
10.1 Special Statement·····23
10.2 Warranty Period·····23
10.3 After Sales·····23

Welcome to use our device, please read this manual carefully to install and operate device exactly. This user manual is for reference only. If some contents and operation steps are inconsistent with those for the actual product, the latter will prevail.

With TK417 GNSS Tracker, we can monitor your vehicle by GNSS satellite positioning system, LTE network communication and Internet, a real-time remote location and control of vehicles can be achieved through a powerful service platform.
Integrates LTE CAT1 + 2G dual-mode communication,Multi-GNSS,Wi-Fi 6,Bluetooth 5.0and rich sensors, providing a stable, reliable and cost-effective solution for remote monitoring, anti-theft tracking and intelligent control.

Ⅰ. Product Features

■ Support LTE CAT1

■ Support GPS/ BDS/ Glonass/ Galileo/ Qzss. A-GNSS/ LBS/ WiFi for aiding.

■ Data Uploaded by LTE CAT1 regularly, check by Web/APP/SMS.

■ Super Wide Input Voltage： 9-48V DC

■ ACC status detection

■ Built-in Relay to cut engine, auto cut engine when over speed and recover when normal speed.

■ Bluetooth gateway Used as Bluetooth gateway to scan the Beacon

■ Support SOS, External battery, iButton, Temperature and Humidity Sensor Probes

■ Electronic key unlocking; No network security start/automatic identity recognition, restore oil and electricity start vehicles

■ Built-in battery, power disconnect alarm & low battery alarm.

■ Built-in motion sensor, support shock alarm include vibration, collision and falling.

■ GEO-fence alarm, speed & shift alarm.

■ EELINK protocol 2.3, TCP/UDP,Firmware OTA

■ USB connect with PC to configure device

■ Waterproof level IP54

Basic Specifications

Voltage	12/ 24/ 36/ 48 VDC
Work Current	23mA
Satellite Accuracy	5-15m
LBS Accuracy	>100m
GNSS Band	1575MHz
LTE Band	LTE-FDD： B1/2/3/4/5/7/8/12/13/14/17/18/19/20/25/26/28/66/71 LTE-TDD： B34/38/39/40/41
Working Temperature&humidity	-20℃~75℃; 20%~90% RH
Hot/warm/cold Start	<3s, <26 s, <35 s
Battery Capacity	200mAh
Dimensions	97(L)X 40(W) X 15.5(H) mm
Bluetooth/WIFI	BLE 2.4G ;WIFI 2.4G
Accessory Expansion	SOS,External battery, iButton,Temperature and Humidity Probes
Net Weight	55g

II. Components and Accessories

■ Components

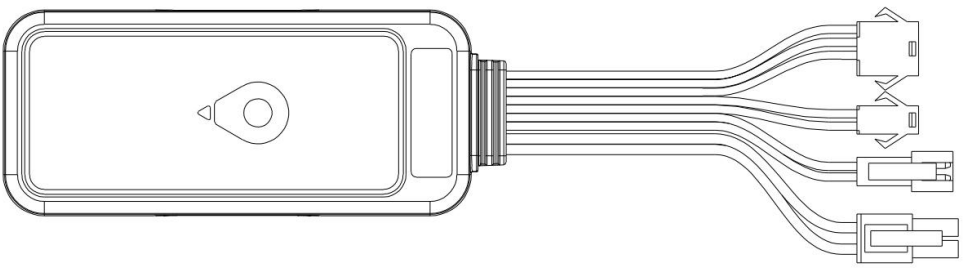

-Top Front- (Towards sky)-

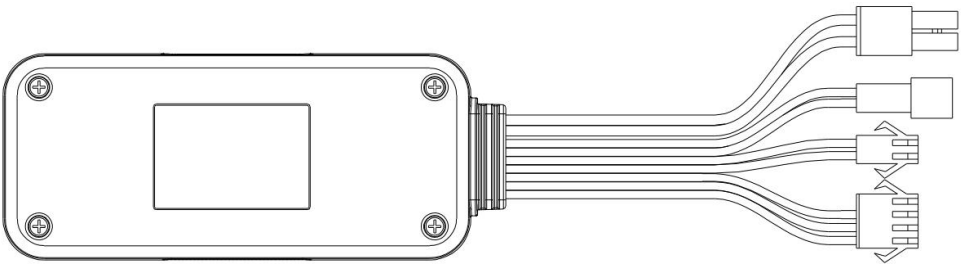

-Bottom -

■ Accessories

Relay for remotely cut engine, SOS button used for sos help, External battery used for power supplier, iButton can be used for interactive functions such as driver's identification;Temperature sensor used monitoring temperature data; Internal Bluetooth can be as a beacon host;

Power Cable(Default)

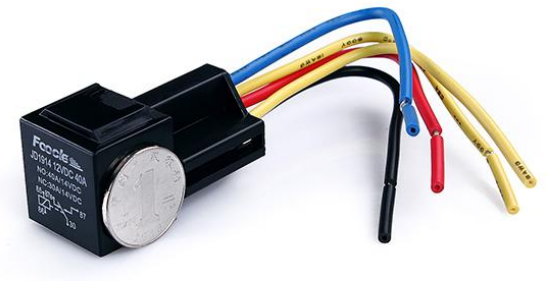

Relay (Built-in)

SOS PIN6/7(Default Optional)

IButton PIN6/7(Default Optional)

BEACON

External Battery PIN 6/7(Optional)

Temperature and Humidity Probes (PIN4、PIN5、PIN6、PIN7)

Ⅲ. SIM Card Installation

Open the packing case, check if device is OK and accessories are intact,

You need a suitable SIM card for using device, contact your dealer if any question;

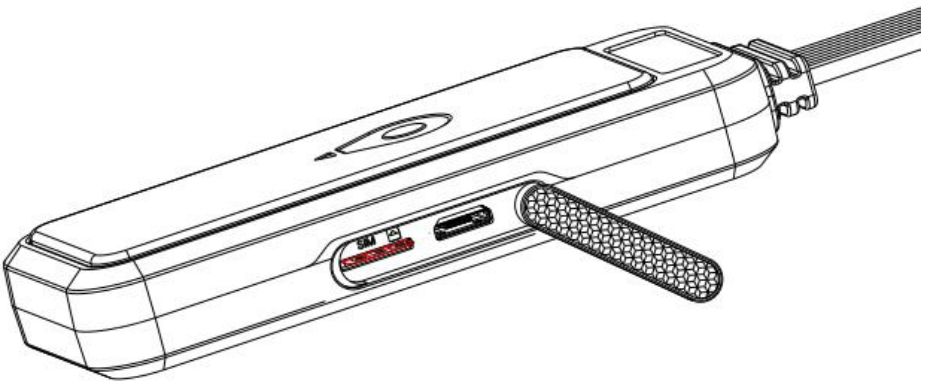

Open SIM Card cover

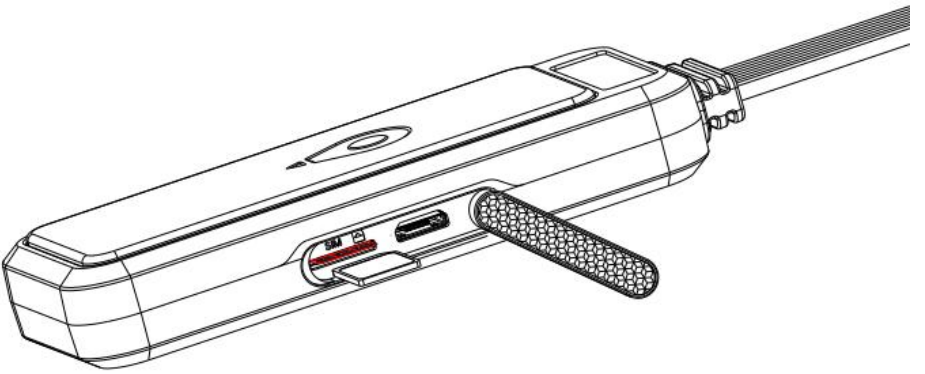

Put SIM Card

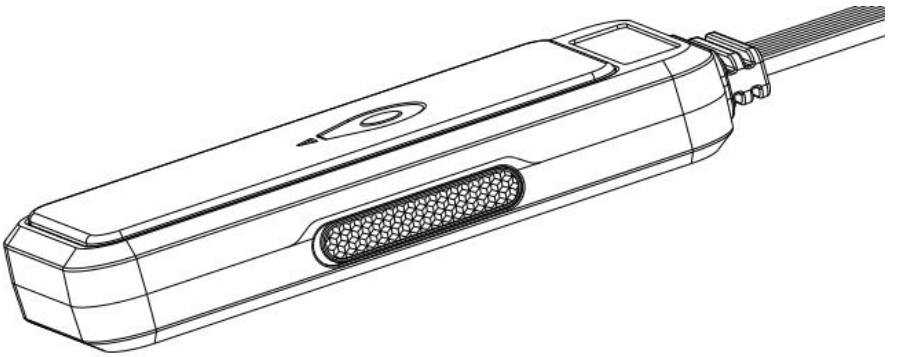

Press cover and close

Note:

- Please cut off the power before installing or uninstalling SIM card.
- SIM card should have LTE function, open it's network through operator.
- SIM card should open Caller Identification function for telephone querying.
- If you enable the PIN code of the SIM card, please use your mobile phone to disable it.
- Please make sure SIM card has sufficient balance.

Ⅳ. Device Installation

4.1 Install Device

4.1.1 Please install device concealed by professional person

Please make sure to install device with up side upward, and use wide strong double-sided adhesive sponge to fix it.

4.1.2 Installation Notice

- Hide device properly inside the car body in order to avoid damages.
- Keep device away from RF emission sources such as backing radar, car burglar alarm and other vehicle mounted communication devices.
- Suggest to use wide strong double-sided adhesive sponge to fix it, or use cable ties and other liable methods to fix it.

- Device Built-in LTE antenna and GNSS antenna, Please ensure that signal receiving side is facing up(towards the sky) when doing installation, without any metal material covered on the top.It may weaken signal and results in not work properly.

4.2 Device wiring definition

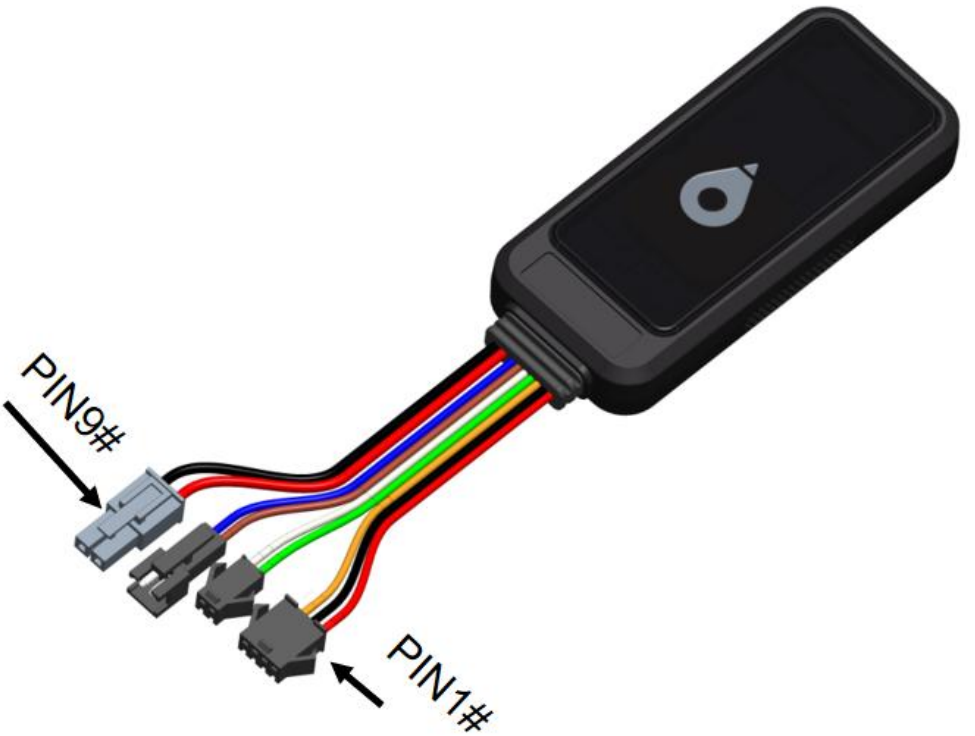

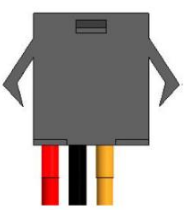

1#	Power+Red
2#	Power-, Black
3#	ACC, Orange

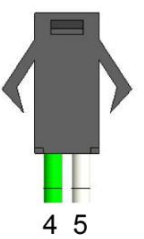

4#	GPIO port, Green
5#	GPIO port, White

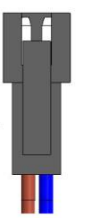

6#	SOS, Brown
7#	SOS, Blue

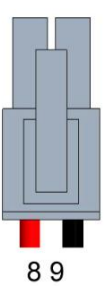

8#	Relay, Red
9#	Relay, Black

TK417 Function Module Definition

PIN1~PIN9

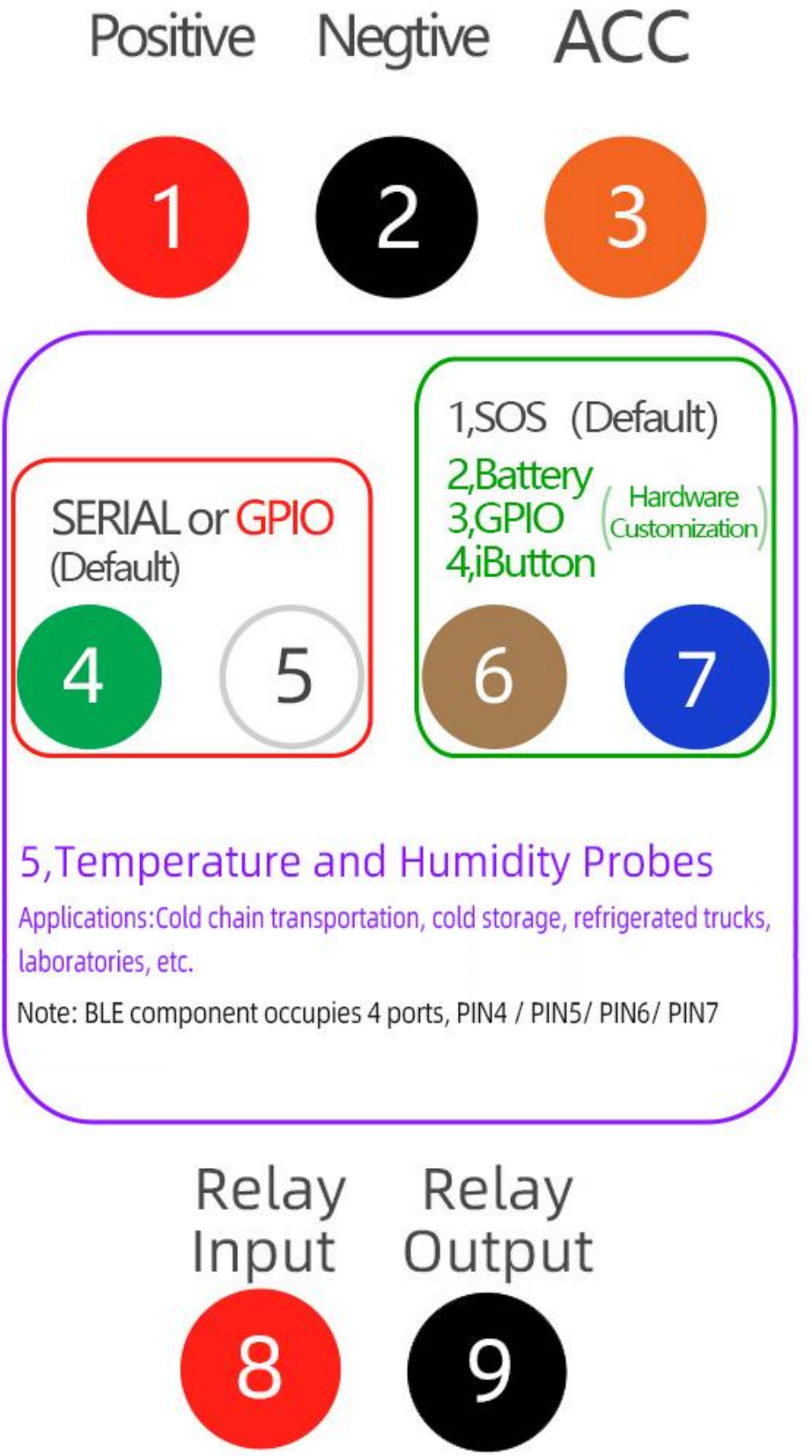

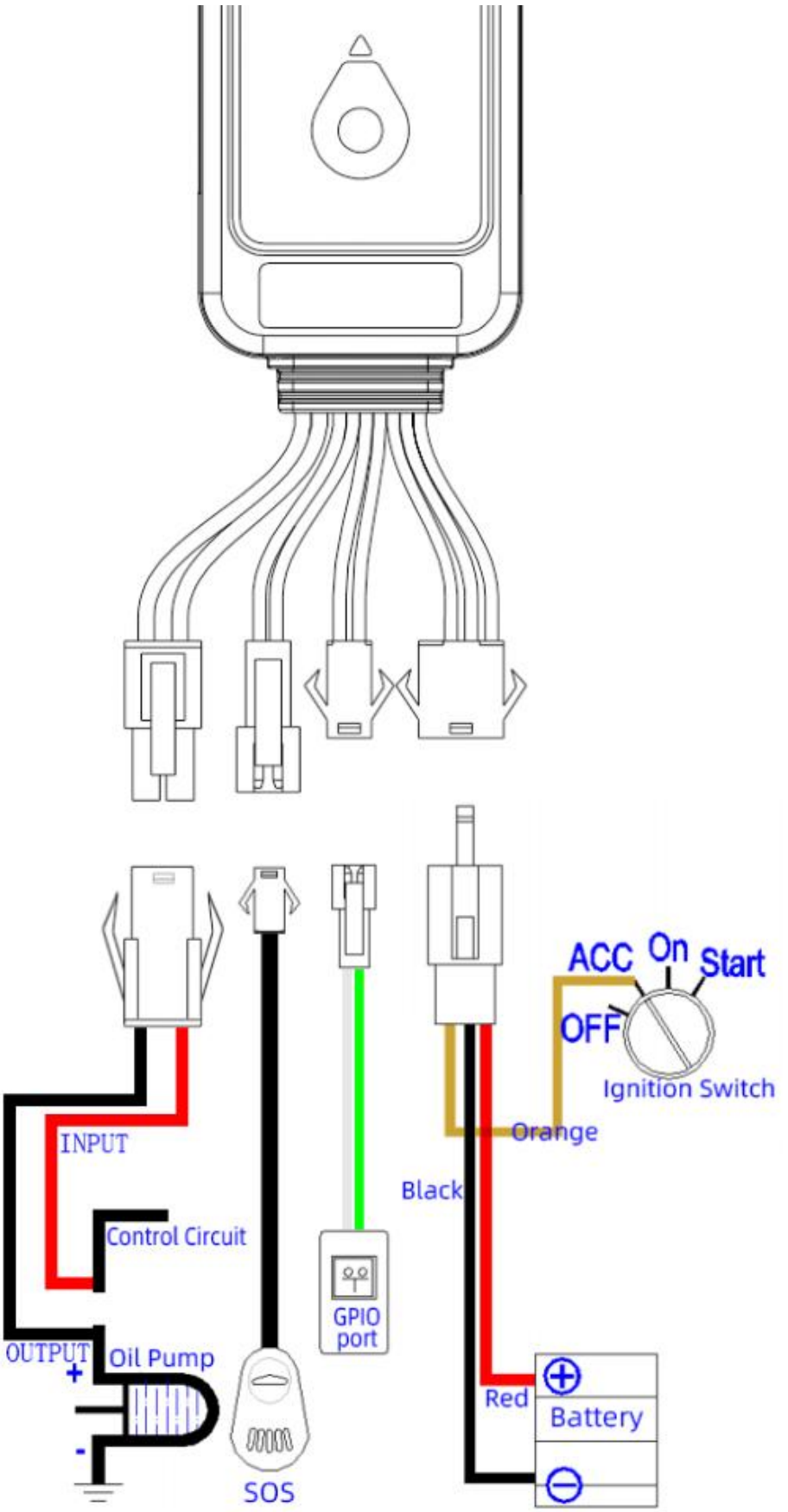
ACC
On
Start
OFF
Ignition Switch
Orange
Black
INPUT
Control Circuit
GPIO port
OUTPUT
Oil Pump
+
-
SOS
Red
Battery

Power cables and interface

The standard input voltage of device is 9V-48VDC, so please choose the our original power cables, the red cable is positive and the black cable is negative; Please ground negative pole separately or ground it to ground connection, not to any other ground.

Connect the ACC cable (orange cable) to ACC switch of the vehicle, the position server will get ignition status of vehicle; the ACC cable can also be connected directly to the positive pole of the vehicle power, then the position server think that the vehicle is always ignited.

Connect SOS/Battery/iButton with PIN6 & PIN7.

Connect Blue Tooth/Temperature and Humidity Probes with PIN4 / PIN5/ PIN6/ PIN7.

Built-in Relay connected via PIN8 and PIN9 (PIN8 relay normally closed input. PIN9 relay normally closed output).

V. Power On / Off

5.1 Power on

Power on: insert a valid SIM card and wire all the cables, device will power on.

5.2 LED Indicators

The red LED flickers fast when device is searching for LTE network, it flickers intermittently when device has registered the LTE network successfully.

The blue LED flickers fast when device is searching for the GNSS satellite signal, it flickers intermittently when device has searched the satellites and can be positioned.

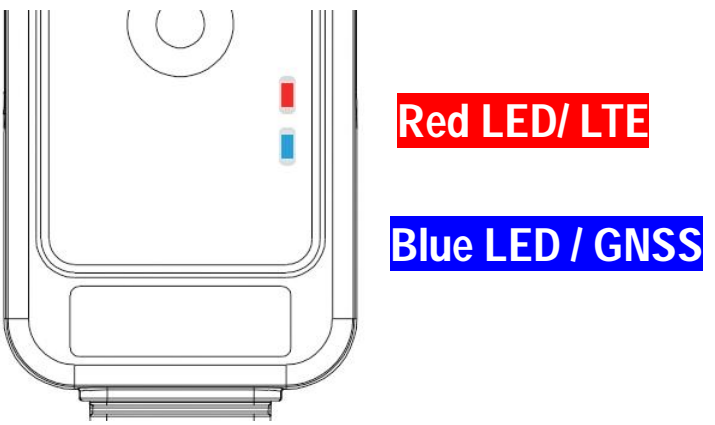

1. Red LED(indicates LTE state)

Fast blinking	Searching for LTE network
Slow blinking	LTE works normally

2. Blue LED(indicates GNSS state)

Fast blinking	Searching GNSS Satellites
Slow blinking	GNSS works normally

5.3 Power off

Disconnect the external power and take off SIM

card, after a while device will shut down.

Ⅵ. Inquiry/Monitoring/Cut Oil

6.1 Inquiry by Service Platform

6.1.1 Web Browser platform

Login the service platform and enter your ID and password to check the position of device. Please ask your dealer for the WWW address of the position service platform.

6.2.2 Smart phone applications

You can use a smart phone to check device's position. We have prepare for you the Android client (Android), Apple clients (IOS), please check with your dealer to get installation package.

6.2 Inquiry by SMS

You can write a positioning SMS sending to device to inquiry position, device will reply position SMS or map link. The SMS commands please refer to the Operation Commands 2.0

6.3 Cut Engine/Restore

6.3.1 Cut off oil circuits

Server(LTE) or Manager number (SMS) can send cut-fuel-circuit commands to device when needed. Engine can not start, vehicle will be locked.

To make sure safety of vehicle, fuel of vehicle Can

be cut off only if device has been positioned by GNSSand speed of vehicle is less than 20KM/h or vehicle is static.

6.3.2 Recover oil circuits

Server(/LTE) or Manager number (SMS) can send recover-fuel-circuit commands to device when needed, device will recover fuel circuits of vehicle.

Ⅶ. Device Alarm

7.1 SOS Alarm

Conditions: When SOS button is long pressed for 3 seconds.

Note: SOS button must be installed (optional accessory), and SOS administrator number must be set. When the SOS alarm occurs, device will dial the set SOS administrator number 3 times until getting through.
Note: When above alarm occurs, Device will send alarm to service platform, meanwhile send a SMS message to administrator number if this number was set.

7.2 Vibration Alarm

Conditions: When Vehicle Vibration occurs.

Note: You need to set vibration sensitivity and time, there is an alarm switch.

7.3 Shock Alarm

Conditions: When Vehicle's acceleration achieve a value.

Note: You need to set the acceleration value threshold.

7.4 Speed Alarm/Cut engine when over speed

Alarm Conditions: When vehicle speed over and below the setting speed.
Cut engine Conditions: Cut engine when over speed (Restore engine when speed recover)

Note: You can set a low speed or a high speed value, also an over-speed value to cut engine

7.5 Shift Alarm

Conditions: When vehicle occur a setting shift in the Flameout status.

Note: Only valid in flameout state and vehicle occur a setting shift distance.

7.6 Geo-fence Alarm

Conditions: when the vehicle entry / exit / across the Geo-fence.

Note: You need to set the conditions of crossing fence, fence types and so on.

7.7 Power Disconnect Alarm

Conditions: When the device is disconnected from external Power.

7.8 Low Battery Alarm

Conditions: When the device is disconnected from external Power and built-in battery power falls below a certain value .

Note: Alarm parameters must be set in 7.1~7.6, Please refer to the <**Operation Commands 2.0**>

Note: When above alarm occurs, device will send alarm to service platform, meanwhile send a SMS message to the administrator number if it was set.

7.9 Temperature and humidity Alarm

Real time temperature and humidity monitoring, remote management.Generate an alarm when the temperature exceeds the set value.

Note: Temperature and Humidity Probes must be installed (optional accessory)

Ⅷ. Device Setting

Please refer to <**Operation Commands 2.0**>

Ⅸ. Trouble shooting

9.1 Cannot connect platform

device is never online on the position server when installed at the first time. Please check device:

1）If power cables are wired correctly? Pay attention to not connect them to controlling cables of vehicle.

2） If SIM card is installed correctly? Please refer to the installation instructions.

3） Check the status of LED indicators. If device is OK, red LED and blue LED will intermittently flick.

4） Inquiry parameters of device via commands and check replied parameters.

9.2 Offline status

First check if LED indicators are OK, if cannot check them, you can check SIM card following next steps:

1） Call SIM card of device and check if you can hear connecting ring.

2） Check if vehicle is in the area where there is no LTE signal.

3） Check if one device or all devices are offline in the area . If all devices are offline, you should ask operator If network is OK.

4） Check if SIM card has enough balance.

5） If device becomes offline on the last day of one month, please check GPRS is closed or not.

6） Inquiry parameters of device via commands and check replied parameters.

9.3 No positioned

If the GNSS is active, but device cannot be positioned for long time, please check device:

1） If the vehicle is in the place where there is no GNSS signal.

2） The upside of device should be installed with face toward the sky.

3） The LTE and GNSS signal may be weakened if device is installed in the place with electromagnetic wave absorption material(such as metal blocks), special attention should be paid if there is metal thermal insulation layer or heating layer on the front windshield, so that the position accuracy will decline, and the severe ones will not be positioned.

9.4 Position drift

Serious position drift will be found in places where GNSS signal is poor. Please drive the vehicle to the open places.

9.5 Commands receiving abnormally

1） Check the commands format.

2） Check if the vehicle is in the places where there is LET signal.

3） Check if the SIM card is properly installed.

X. Warranty Rules

10.1 Special statement

1） Technology change without notice.

2) If the color and appearance are inconsistent with those for the actual product, the latter will prevail.

3） Warranty card is only valid for devices with the following IMEI.

4） Please take care of the warranty card and show it with the original purchase receipts when enjoying the warranty service.

10.2 Warranty period

Since the date of purchase, passive waste host has one year warranty.

10.3 After sales

Any of the following circumstances not covered by

the warranty, but may be appropriate to pay repair:

1） More than the warranty period.

2） Unauthorized removal or repair damaged.

3） Damage caused by improper installation, use, maintenance, custody.

4） IMEI label is torn or Obscure.

5） Warranty certificate and product models do not match or warranty certificate be altered.

6） Damage caused by force majeure.

Maintenance Records				
Date	Description	Records	completion Date	Engineer